Performance Tradeoffs of Dynamically Controlled Grid Connected Inverters in Low Inertia Power Systems

Enrique Mallada

JOHNS HOPKINS
WHITING SCHOOL
of ENGINEERING

PNNL CSSI Workshop ACC '17, Seattle

Acknowledgements

Richard Pates

Lund University

Yan Jiang

Johns Hopkins University

NSF

Johns Hopkins Environment, Energy, Sustainability & Health Institute

Science to Shape the Future of the Army — Army Research Office — 1951

Power Systems Control

Generator centered design since the origins

- **Droop control:** Rebalance supply-demand, resync gens., power sharing
- Frequency based **negative feedback**

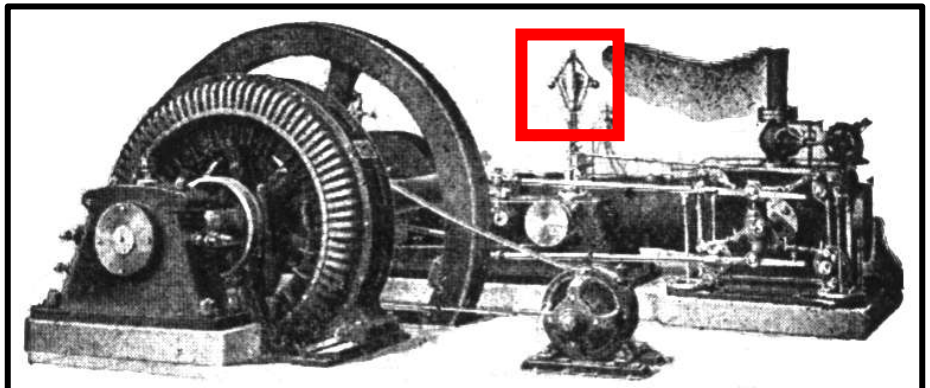

1900s Murray Alternator with Belt-driven Exciter Generator

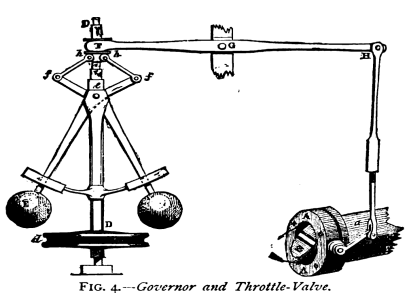

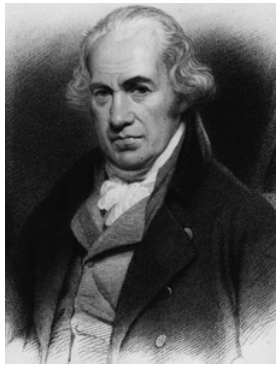

Watt's Centrifugal Governor 1788

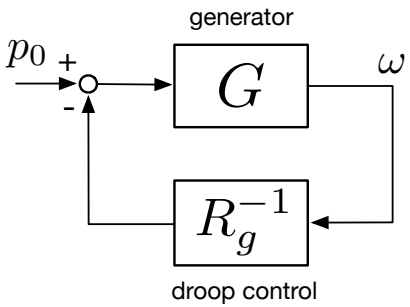

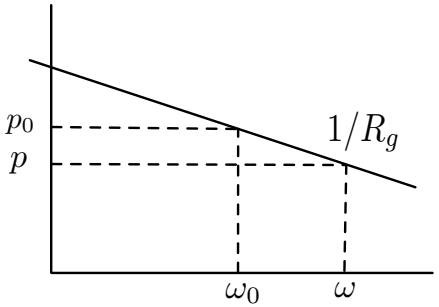

Power Systems Control

Generator centered design since the origins

- **Droop control:** Rebalance supply-demand, resync gens., power sharing
- Frequency based **negative feedback**
- Leverages synchronous generator's natural behavior

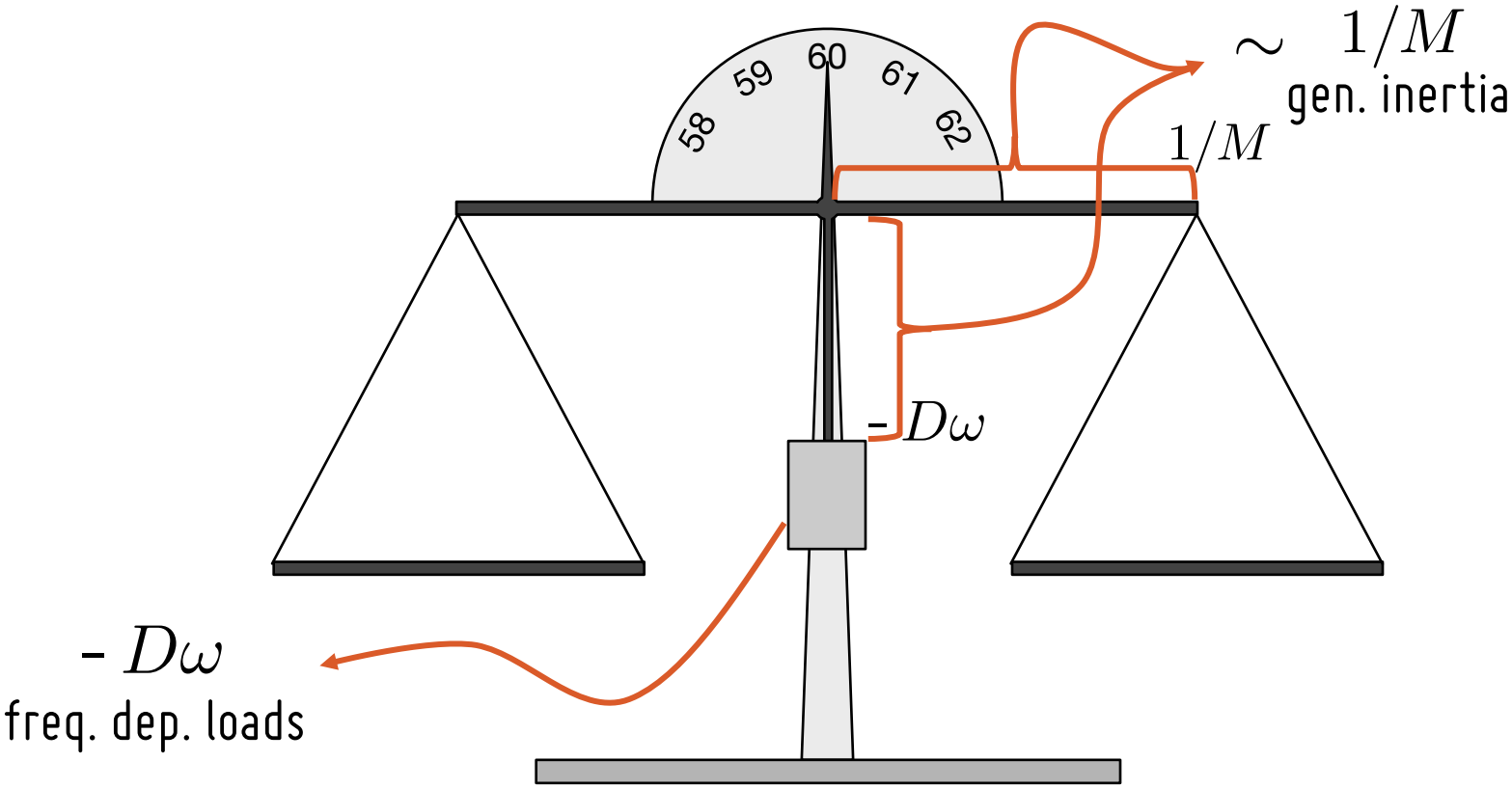

Power Systems Control

Generator centered design since the origins

- **Droop control:** Rebalance supply-demand, resync gens., power sharing
- Frequency based **negative feedback**
- Leverages synchronous generator's natural behavior

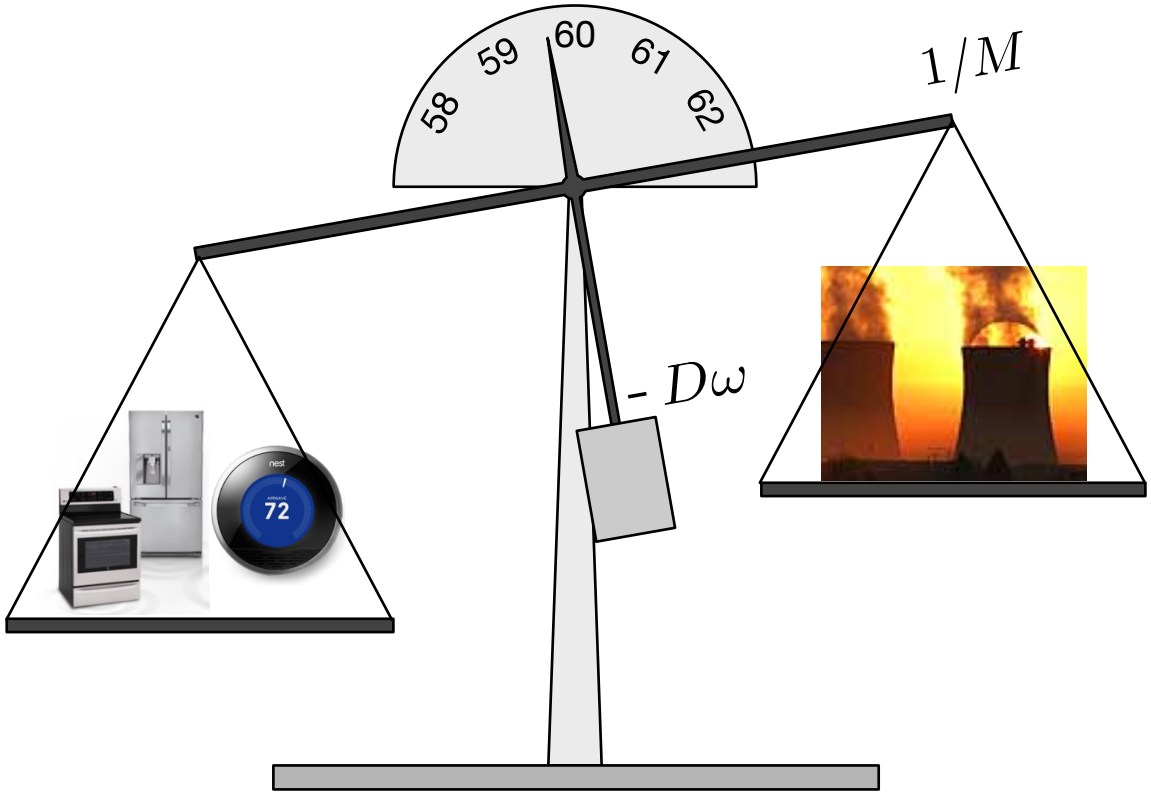

Power Systems Control

Generator centered design since the origins

- **Droop control:** Rebalance supply-demand, resync gens., power sharing
- Frequency based **negative feedback**
- Leverages synchronous generator's natural behavior

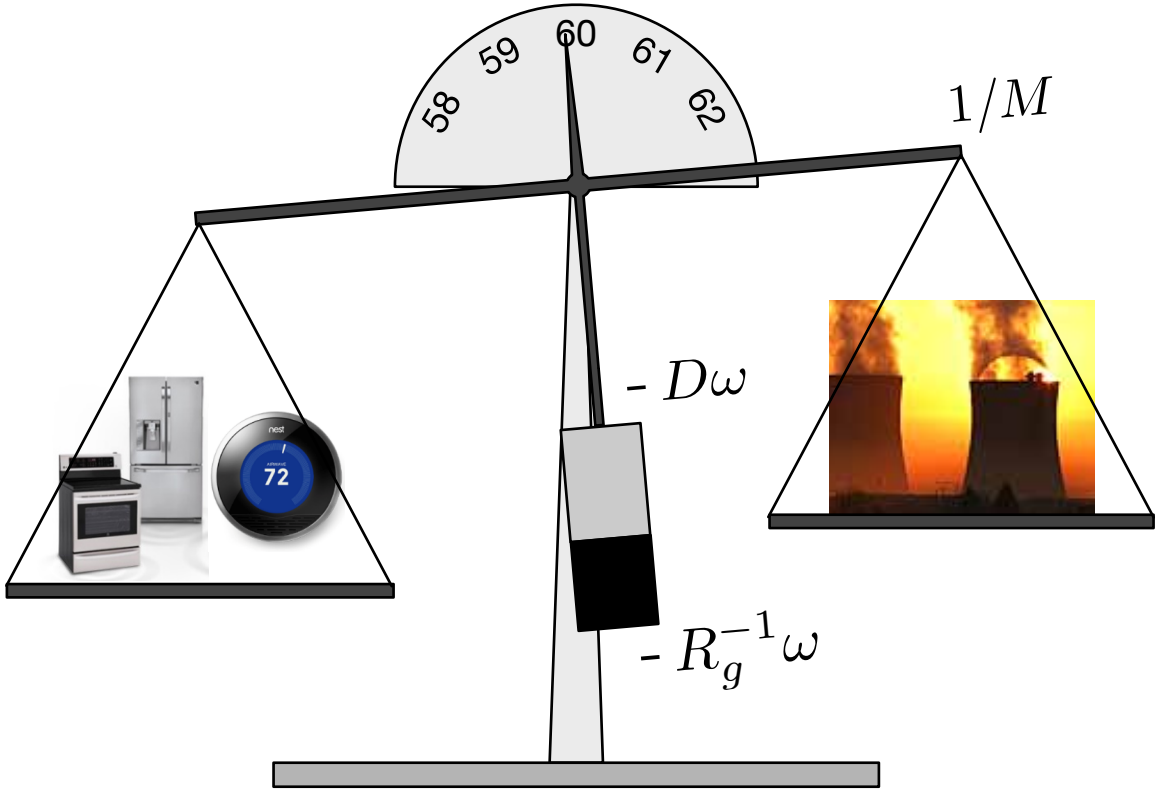

Dynamic Degradation

Ireland: wind curtailment after 50% of load

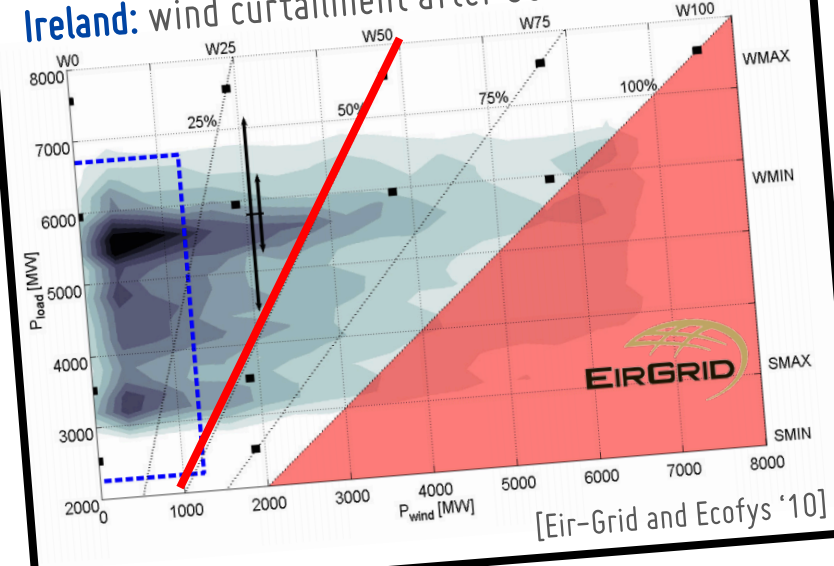

[Eir-Grid and Ecofys '10]

Nordic system: disturbances with frequencies under 49.7 Hz due to an N-1 contingency.

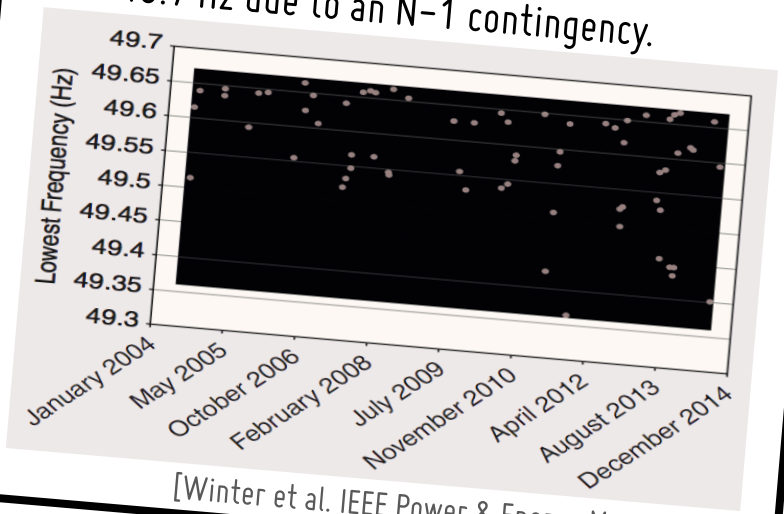

[Winter et al. IEEE Power & Energy Magazine '15]

In the United States:

FERC Federal Energy Regulatory Commission

"While the three [contiguous] U.S. interconnections currently exhibit adequate frequency response performance above their interconnection frequency response obligations, there has been a significant decline in the frequency response performance of the Western and Eastern Interconnections," FERC said.

[FERC, Nov. 16]

Dynamic Degradation

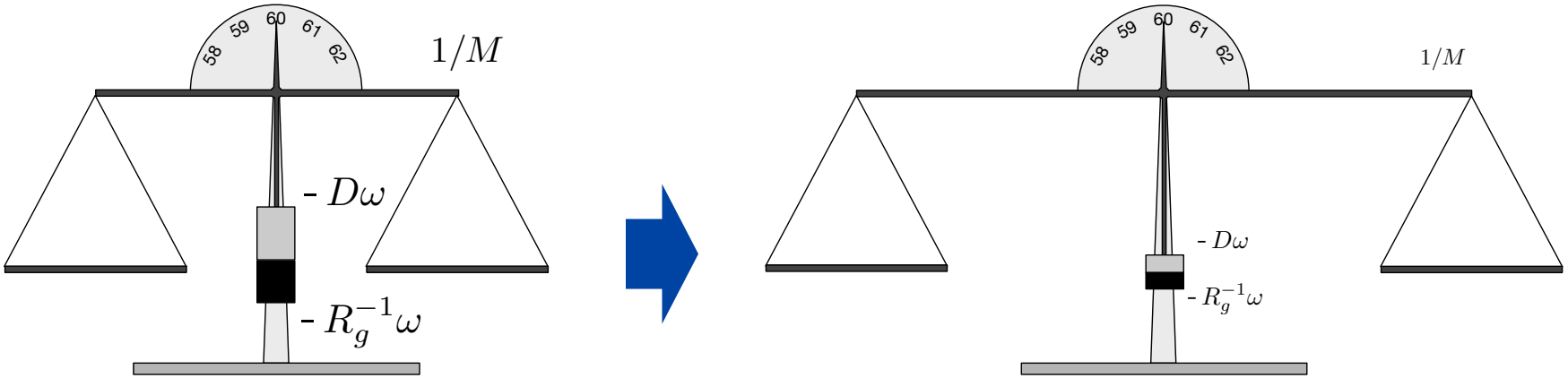

Causes

- **Loss of inertia:** due to both renewables and conventional gens $M \downarrow$
- **Diminishing frequency dependent loads** $D \downarrow$
- **Lack of incentives:** Droop Control in East US: 10% sustained. 30% w/thold. $R_g \uparrow$

Dynamic Degradation

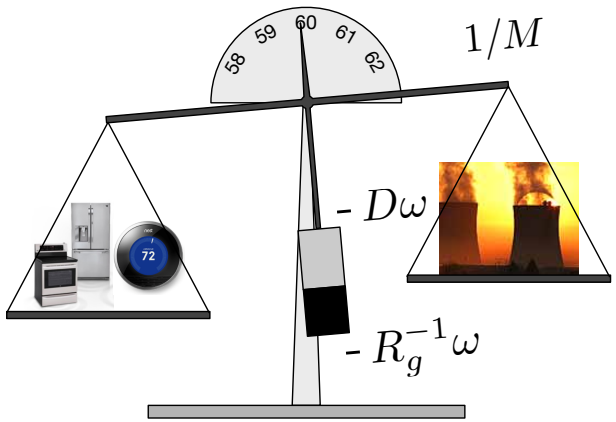

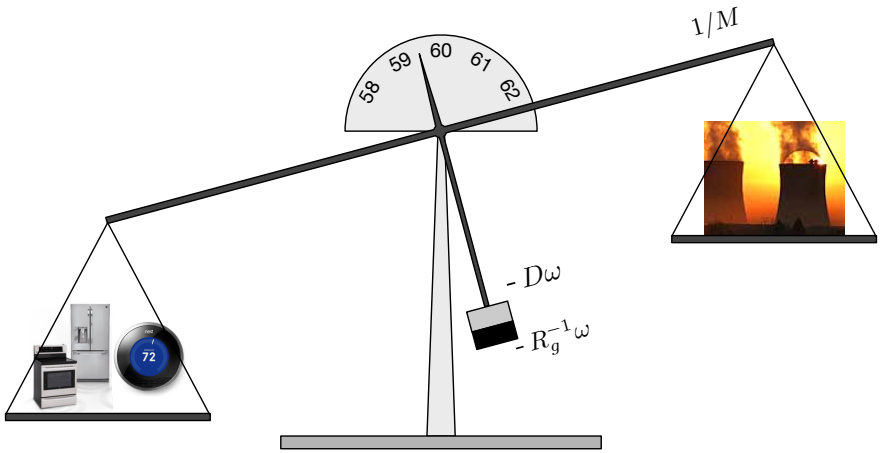

Causes

- **Loss of inertia:** due to both renewables and conventional gens $M \downarrow$
- **Diminishing frequency dependent loads** $D \downarrow$
- **Lack of incentives:** Droop Control in East US: 10% sustained. 30% w/thold. $R_g \uparrow$

Dynamic Degradation

RTO Insider

Your Eyes and Ears on the Organized Electric Markets

CAISO ■ ERCOT ■ ISO-NE ■ MISO ■ NYISO ■ PJM ■ SPP

Home RTOs/ISOs Issues Company News Newsletters Calendar

FERC: Renewables Must Provide Frequency Response

November 21, 2016

By Rich Heidorn Jr.

In a rulemaking reflecting both reliability concerns and the technological advances of renewable generators, FERC on Thursday proposed revising the *pro forma* Large Generator Interconnection Agreement (LGIA) and Small Generator Interconnection Agreement (SGIA) to require all newly interconnecting facilities to install and enable primary frequency response capability (*RM16-6*).

Causes

- **Loss of inert** $M \downarrow$
- **Diminishing** $D \downarrow$
- **Lack of incentives:** Droop Control in East US: 10% sustained. 30% w/thold. $R_g \uparrow$

Inverter-based Control

Challenges

- Measurements with noise and delays
- Stability +robustness (plug & play)
- Lack of incentives

Current approach: Use inverter based control to mimic generators response

Virtual Synchronous Generator

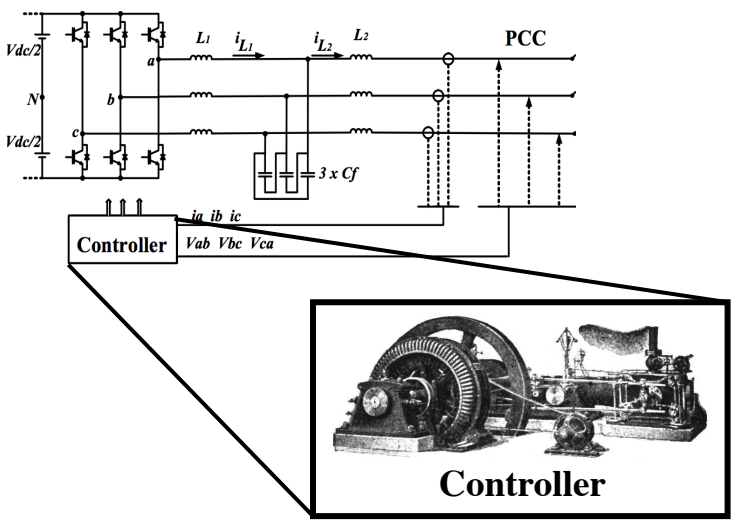

Telecom Analogy

It works, but perhaps there is something better...

Inverter-based Control

Challenges

- Measurements with noise and delays
- Stability +robustness (plug & play)
- Lack of incentives

Our approach: Develop a modeling and analysis framework for systematic design of gird-connected inverter-based control

Dynamic Droop Control (iDroop)

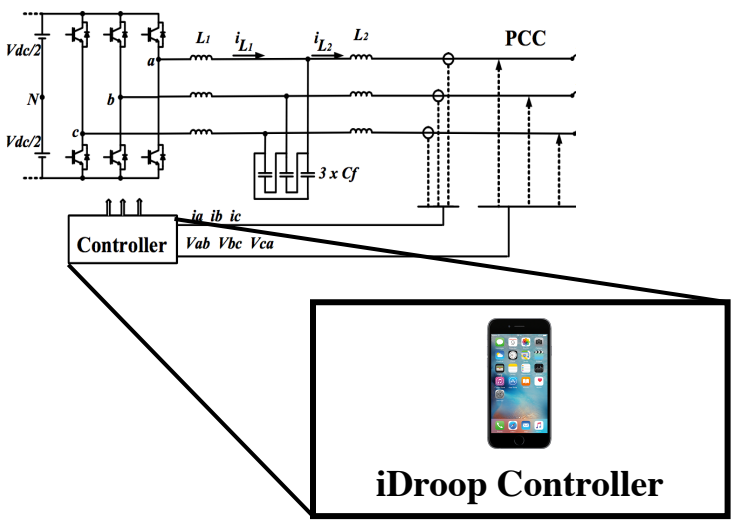

Design Objectives:

- Exploit power electronics capabilities
- Improve Dynamic Performance
- Minimize steady-state effort
- Stability and Robustness to delay and noise (plug & play)

Outline

- Modeling Framework
  - Network Model and Performance Metrics
- Evaluation of Existing Solutions
  - Dynamic and steady-state coupling
- Dynamic Droop Control (iDroop)
  - Decoupling steady-state and dynamic performance
  - Stability and robustness

Power Network Model

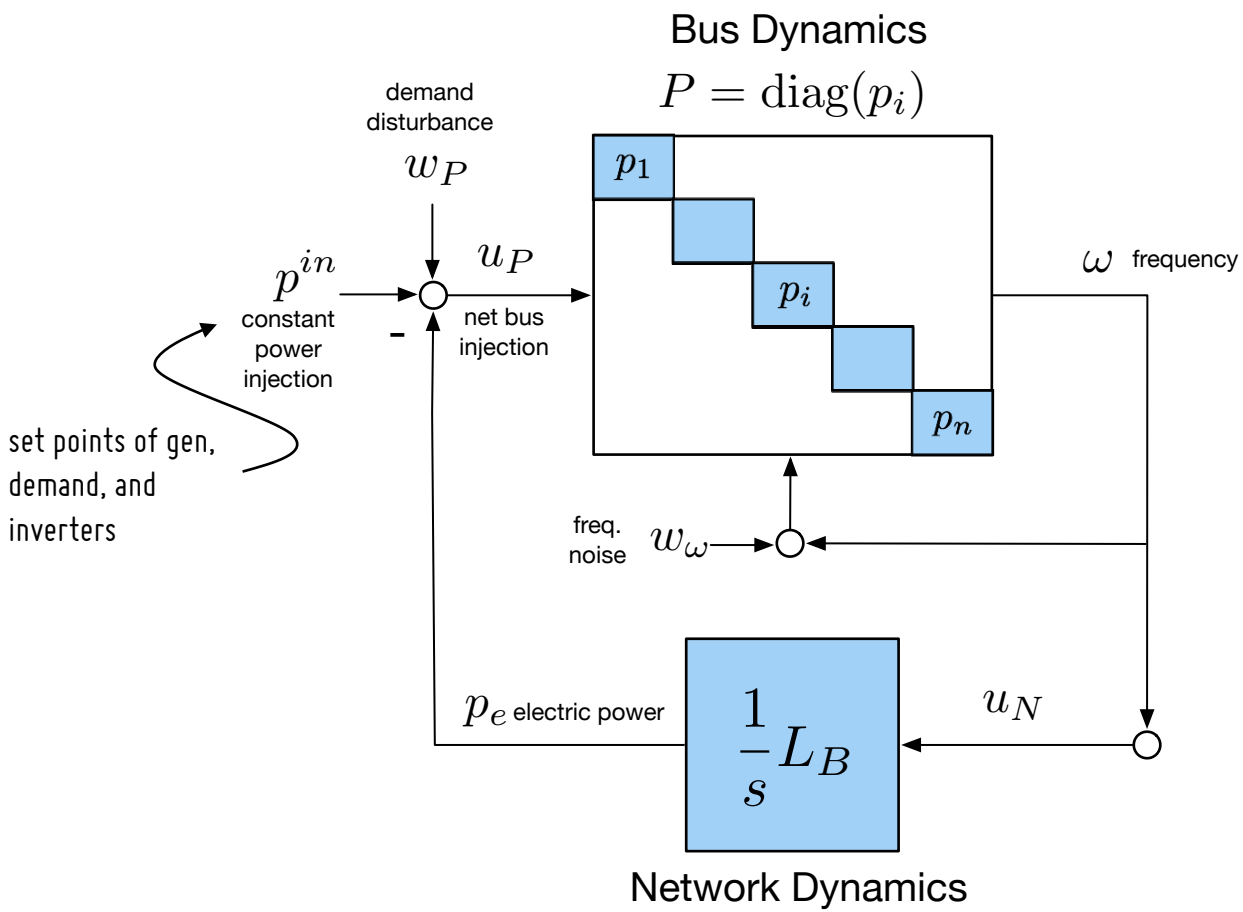

$p^{in},\ u_P,\ w_P,\ w_\omega \in \mathbb{R}^n$

standard deviations: $\kappa_P,\ \kappa_\omega$

Bus and Network Dynamics

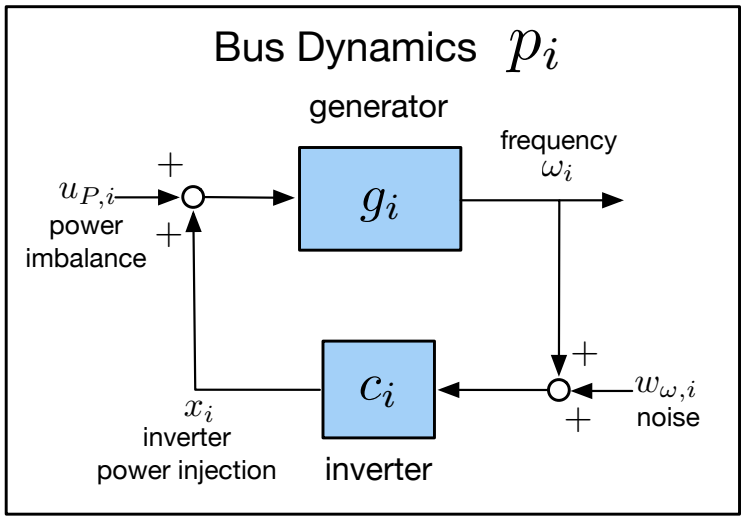

Generator Dynamics

- **Example: Swing Equations**

$$g_i: \begin{aligned} M_i\dot{\omega}_i &= -(D_i + R_{g,i}^{-1})\omega_i + x_i + u_{P,i} \\ y_{P,i} &= \omega_i \end{aligned}$$

$$g_i(s) = (M_i s + D_i + R_{g,i}^{-1})^{-1}$$

Inverter control: Dynamic Droop

$$\hat{x}_i(s) = c_i(s)(\hat{\omega}_i(s) + \hat{w}_{\omega,i}(s))$$

Droop Control: $c_i(s) = -R_{r,i}^{-1}$

Virtual Inertia: $c_i(s) = -(\nu_i s + R_{r,i}^{-1})$

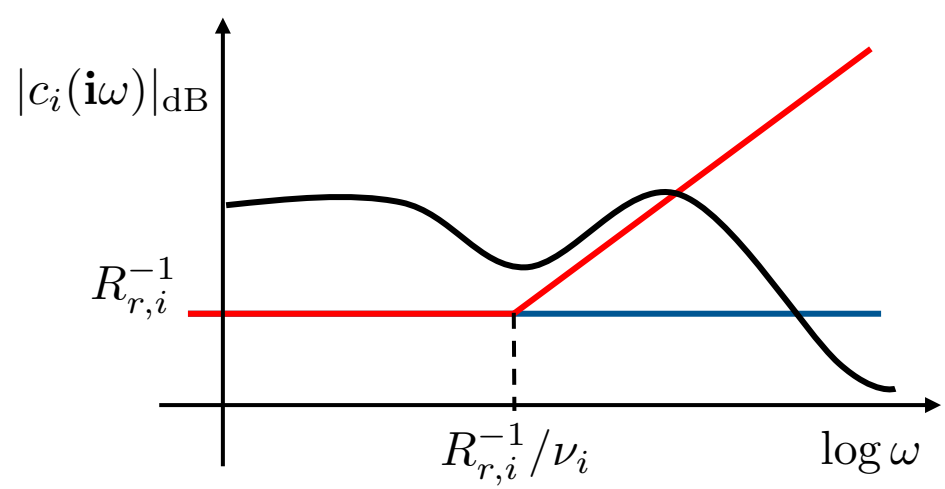

Bus and Network Dynamics

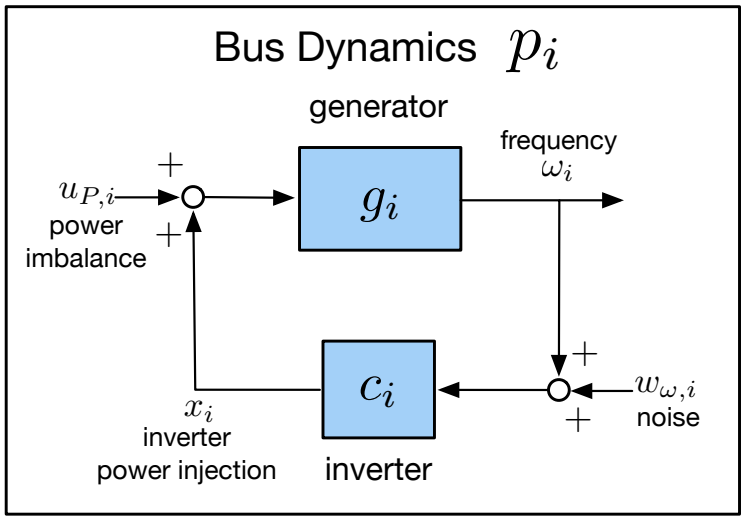

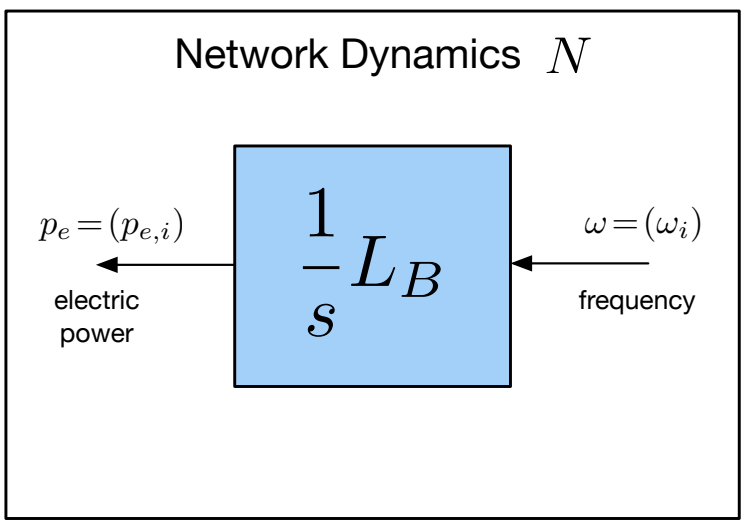

Generator Dynamics

- Example: Swing Equations

$$g_i : \begin{aligned} M_i \dot{\omega}_i &= -(D_i + R_{g,i}^{-1})\omega_i + x_i + u_{P,i} \\ y_{P,i} &= \omega_i \end{aligned}$$

$$g_i(s) = (M_i s + D_i + R_{g,i}^{-1})^{-1}$$

Inverter control: Dynamic Droop

$$\hat{x}_i(s) = c_i(s)(\hat{\omega}_i(s) + \hat{w}_{\omega,i}(s))$$

Droop Control: $c_i(s) = -R_{r,i}^{-1}$

Virtual Inertia: $c_i(s) = -(\nu_i s + R_{r,i}^{-1})$

Network Dynamics

$$N : \begin{aligned} \dot{\theta} &= u_N := \omega \\ p_e &= L_B \theta \end{aligned}$$

Performance Metrics

Steady-state Performance

SS-Cost:

In steady state $x_i^* = c_i(\mathbf{i}0)\omega^*$

$$\boxed{\frac{x_i^*}{\text{Imbalance}} = \frac{c_i(\mathbf{i}0)}{\sum_{j=1}^n c_j(\mathbf{i}0) + R_{g,j}^{-1}}}$$

E.g.: Virtual Inertia and Droop Control

$$x_i^* = -R_{r,i}^{-1}\omega^*$$

$$\frac{x_i^*}{\text{Imbalance}} = \frac{R_{r,i}^{-1}}{\sum_{j=1}^n R_{r,j}^{-1} + R_{g,j}^{-1}}$$

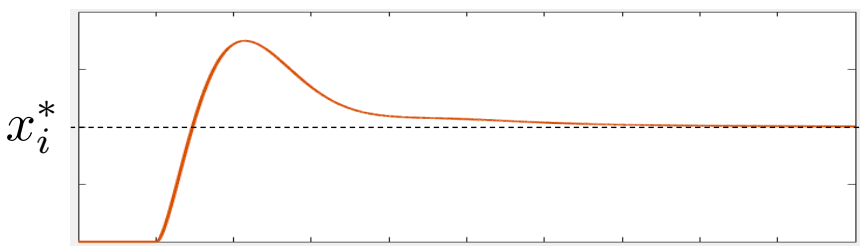

[Zhao '14, Li '14, M '14, ...]

Dynamic Performance

Dyn-Cost:

$$\boxed{||G||_{\mathcal{H}_2}^2 = \lim_{t\to\infty} E\left[\sum_{i=1}^n \omega_i(t)^2\right]}$$

with while noise disturbances:

$$E[w_\omega(\tau)^T w_\omega(t)] = k_\omega^2 \delta(t-\tau) I \quad \text{(freq. noise)}$$

$$E[w_P(\tau)^T w_P(t)] = k_P^2 \delta(t-\tau) I \quad \text{(demand dist.)}$$

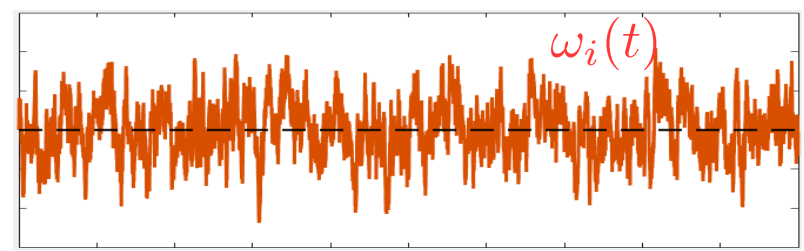

[Tegling '15, Poolla et al '15, Gurnberg '16, ...]

Question: Can we tune independently **Dyn-Cost** from **SS-Cost**?

Outline

- Modeling Framework
  - Network Model and Performance Metrics
- Performance Evaluation of Existing Solutions
  - Dynamic and steady-state coupling
- Dynamic Droop Control (iDroop)
  - Decoupling steady-state and dynamic performance
  - Stability and robustness

Performance Evaluation

Qualitative illustration with homogeneous parameters:

$$R_{r,i} = r_r,\ R_{g,i} = r_g,\ D_i = d,\ M_i = m,\ \nu_i = \nu$$

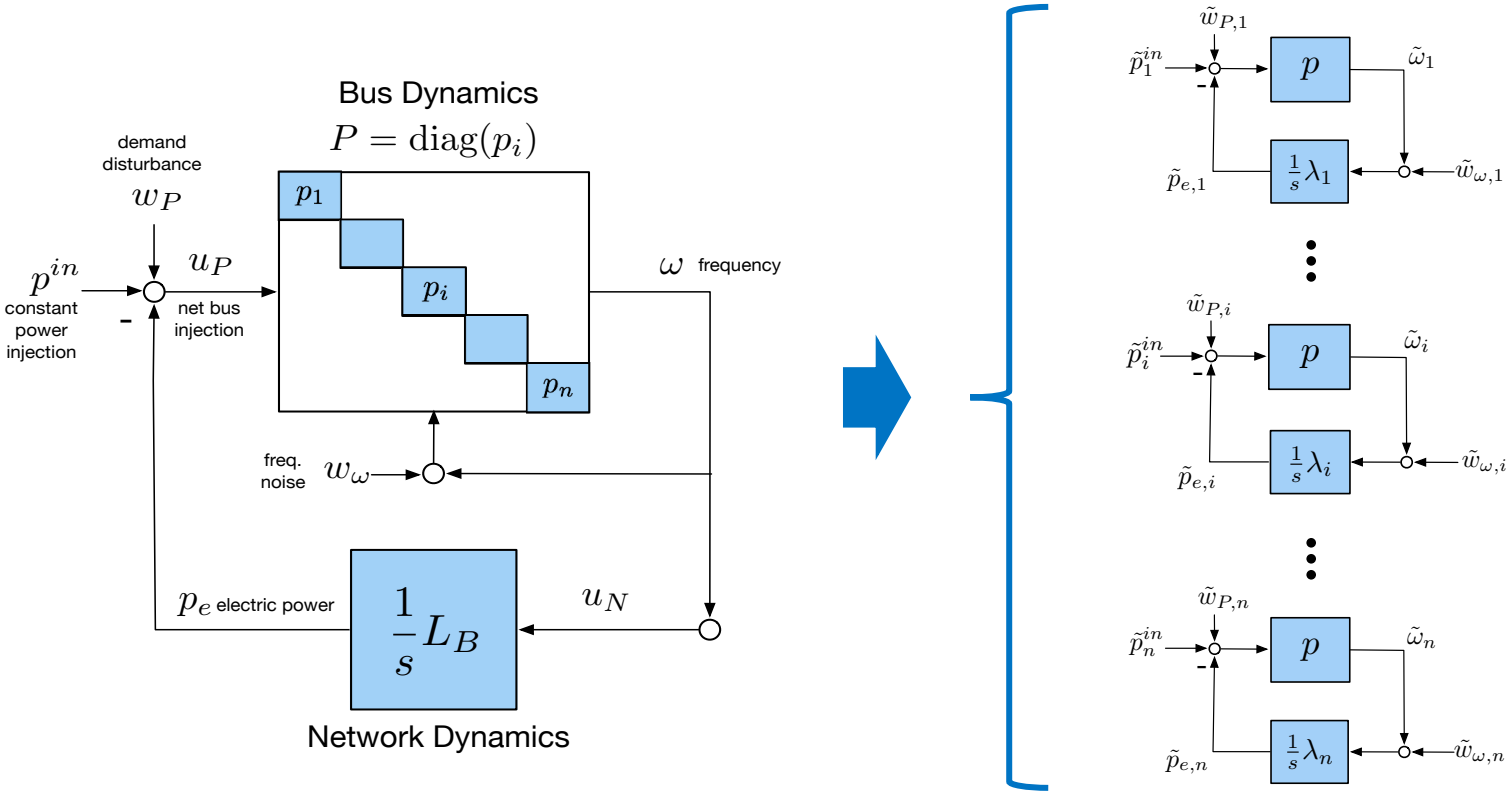

$\lambda_i =$ ith eigenvalue of L_B

[Tegling et al. '15, Poolla et al '15, Gurnberg et al. '16, Simpson-Porco et al. '16,...]

Performance Evaluation

Qualitative illustration with homogeneous parameters:

$R_{r,i} = r_r,\ R_{g,i} = r_g,\ D_i = d,\ M_i = m,\ \nu_i = \nu$

	Steady-state % share	$\|\|G\|\|^2_{\mathcal{H}_2}$
Droop Control $c_i(s) = -r_r^{-1}$	$\dfrac{r_r^{-1}}{r_g^{-1} + r_r^{-1}}$	$\dfrac{n\left((k_P)^2 + (k_r {r_r}^{-1})^2\right)}{2m(d + {r_g}^{-1} + {r_r}^{-1})}$

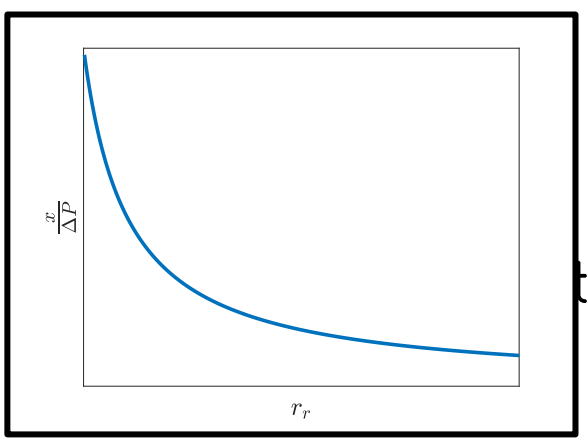

te and dynamic perforr

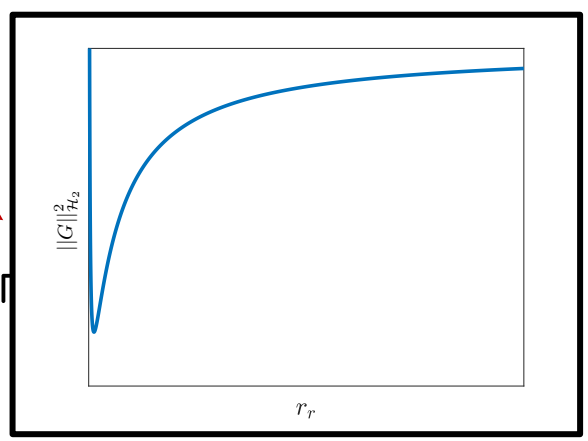

[Tegling et al. '15, Poolla et al '15, Gurnberg et al. '16, Simpson-Porco '16,...]

Performance Evaluation

Qualitative illustration with homogeneous parameters:

$R_{r,i} = r_r,\ R_{g,i} = r_g,\ D_i = d,\ M_i = m,\ \nu_i = \nu$

	Steady-state % share	$\|\|G\|\|^2_{\mathcal{H}_2}$
Droop Control $c_i(s) = -r_r^{-1}$	$\dfrac{r_r^{-1}}{r_g^{-1} + r_r^{-1}}$	$\dfrac{n\left((k_P)^2 + (k_r {r_r}^{-1})^2\right)}{2m(d + {r_g}^{-1} + {r_r}^{-1})}$
Virtual Inertia $c_i(s) = -(\nu s + r_r^{-1})$	$\dfrac{r_r^{-1}}{r_g^{-1} + r_r^{-1}}$	$+\infty$

Droop Control: Steady-state and dynamic performance depend on r_r

Virtual Inertia: Unbounded noise amplification due to derivative term νs

[Tegling et al. '15, Poolla et al '15, Gurnberg et al. '16, Simpson-Porco '16,...]

Outline

- Modeling Framework
  - Network Model and Performance Metrics
- Performance Evaluation of Existing Solutions
  - Dynamic and steady-state coupling
- Dynamic Droop Control (iDroop)
  - Decoupling steady-state and dynamic performance
  - Stability and robustness

iDroop: Dynamic Droop Control

Our initial try: Instead of ...

Virtual Inertia: $x_i = -{R_{r,i}}^{-1}\omega_i - \nu_i\dot{\omega}_i \qquad c_i(s) = -(\nu_i s + R_{r,i}^{-1})$

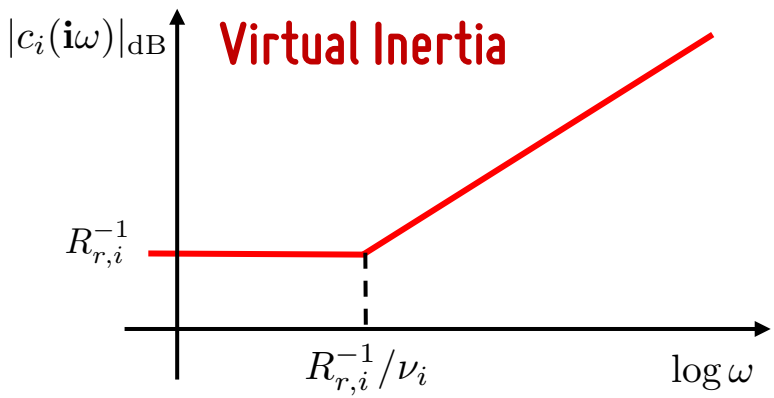

iDroop: Dynamic Droop Control

Yan Jiang
Johns Hopkins University

Our initial try: Instead of ...

Virtual Inertia: $x_i = -{R_{r,i}}^{-1}\omega_i - \nu_i\dot{\omega}_i$ $\qquad c_i(s) = -(\nu_i s + R_{r,i}^{-1})$

use

iDroop: $\dot{x}_i = -\delta_i\left({R_{r,i}}^{-1}\omega_i + x_i\right) - \nu_i\dot{\omega}_i$

$$\boxed{c_i(s) = -\nu_i\frac{s + \delta_i\left(R_{r,i}^{-1}/\nu_i\right)}{s + \delta_i}}$$

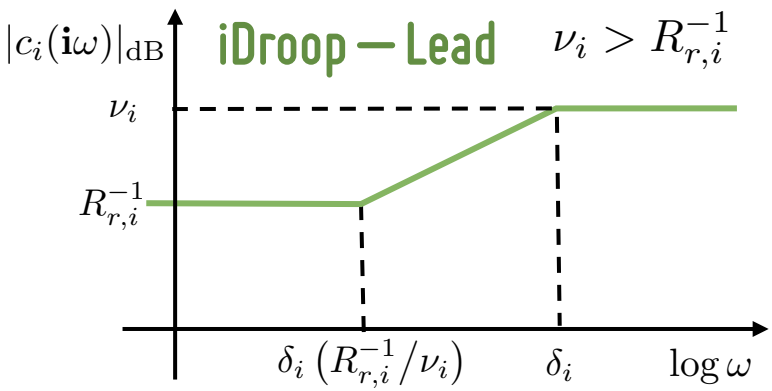

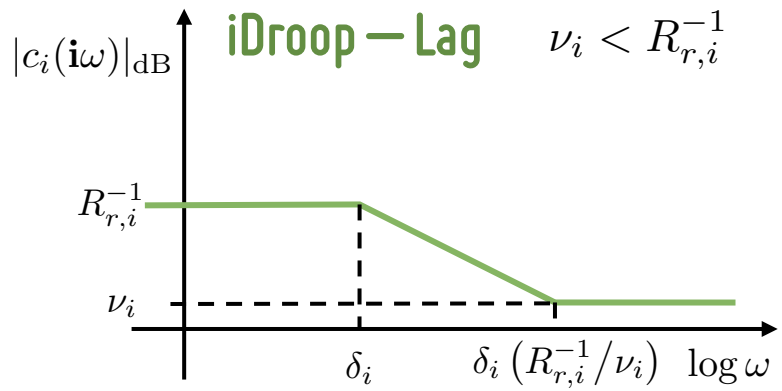

$$\boxed{\|G_{\mathbf{iDroop}}\|_{\mathcal{H}_2}^2 = \frac{n(k_P^2 + (\nu k_r)^2)}{2m(\nu + r_g^{-1} + d)} + \sum_{i=1}^{n}\frac{\delta^2(\nu - r_r^{-1})\left[\dfrac{k_P^2 + \nu^2 k_r^2}{\nu + r_g^{-1} + d} - (\nu + r_r^{-1})k_r^2\right]}{2\left\{(\nu + r_g^{-1} + d + m\delta)\delta(r_g^{-1} + d + r_r^{-1}) + (\nu + r_g^{-1} + d)\lambda_i\right\}}}$$

Optimal Performance Tuning

Yan Jiang
Johns Hopkins University

Recall: $\|G_{\mathbf{DC}}\|^2_{\mathcal{H}_2}(r_r^{-1}) = \dfrac{n(k_P^2 + (r_r^{-1}k_r)^2)}{2m(r_r^{-1} + r_g^{-1} + d)}$

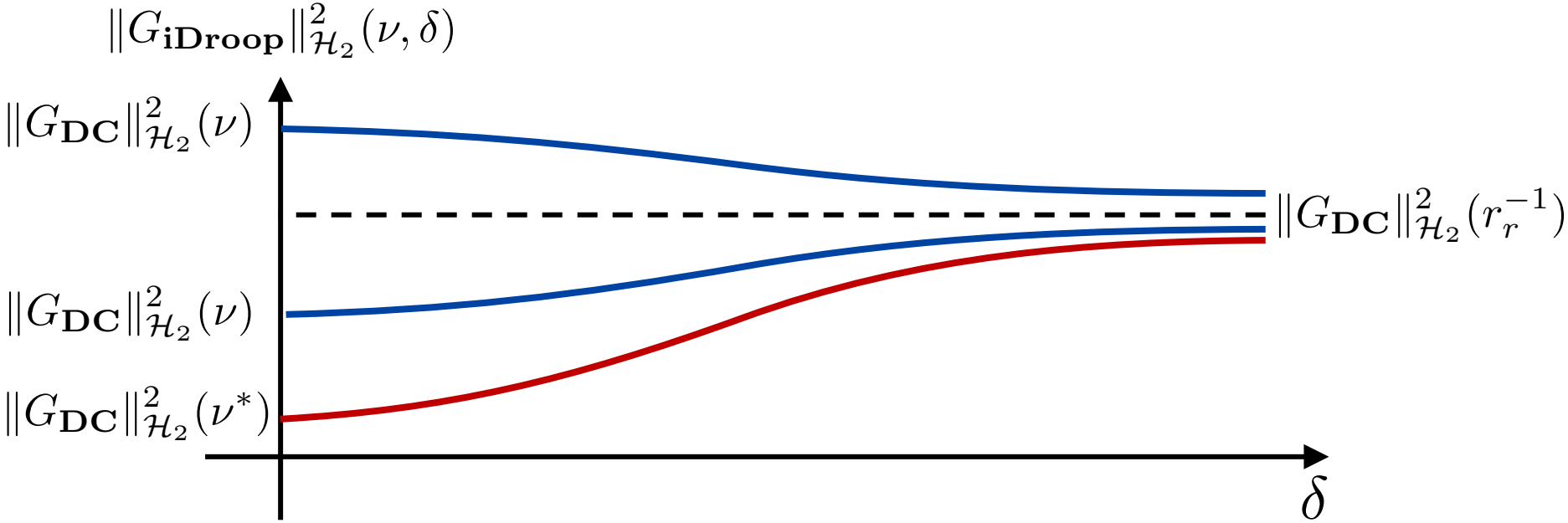

Theorem: If $\|G_{\mathbf{DC}}\|^2_{\mathcal{H}_2}(\nu) < \|G_{\mathbf{DC}}\|^2_{\mathcal{H}_2}(r_r^{-1})$, then for all $\delta \geq 0$:

$$\|G_{\mathbf{iDroop}}\|^2_{\mathcal{H}_2}(\nu,\delta) < \|G_{\mathbf{DC}}\|^2_{\mathcal{H}_2}(r_r^{-1})$$

Optimal when $\nu^* = \sqrt{(d + r_g^{-1})^2 + k_P^2/k_\omega^2} - (d + r_g^{-1}), \quad \delta^* = 0$

Tradeoff: Power disturbances vs freq. noise

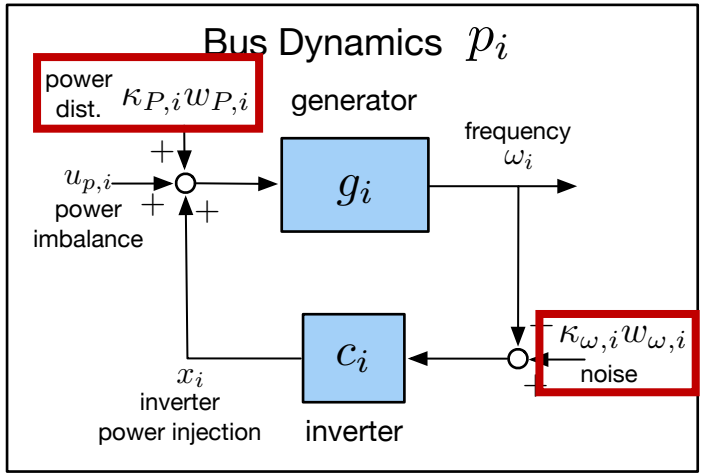

Large disturbances regime $\kappa_P \gg \kappa_\omega$

$$\nu^* \approx k_P/k_\omega, \quad \delta^* \approx 0$$

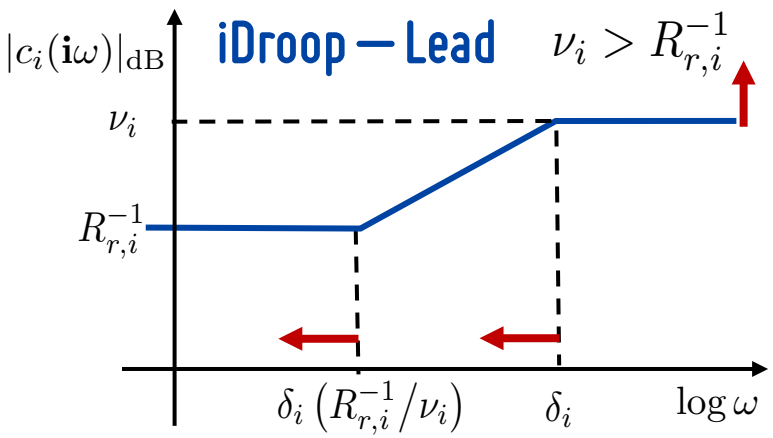

Large noise regime $\kappa_P \ll \kappa_\omega$

$$\nu^* \approx \frac{k_P/k_\omega}{2(d + r_g^{-1})}, \quad \delta^* \approx 0$$

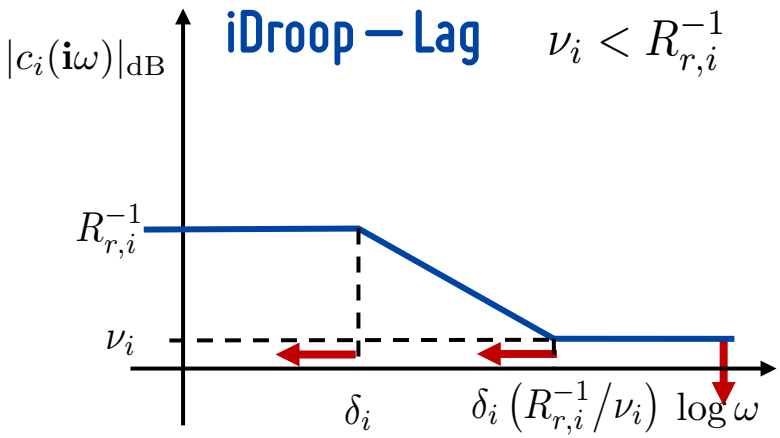

Comparison

iDroop: $\dot{x}_i = -\delta\left({r_r}^{-1}\omega_i + x_i\right) - \nu\dot{\omega}_i \qquad c_i(s) = -\dfrac{\nu s + \delta r_r^{-1}}{s+\delta}$

	Steady-state % share	$\|\|G\|\|^2_{\mathcal{H}_2}$
Droop Control $c_i(s) = -r_r^{-1}$	$\dfrac{r_r^{-1}}{r_g^{-1} + r_r^{-1}}$	$\dfrac{n\left(k_P^2 + ({r_r}^{-1}k_r)^2\right)}{2m(d + {r_g}^{-1} + {r_r}^{-1})}$
Virtual Inertia $c_i(s) = -(\nu s + r_r^{-1})$	$\dfrac{r_r^{-1}}{r_g^{-1} + r_r^{-1}}$	$+\infty$
iDroop $c_i(s) = -\dfrac{\nu s + \delta r_r^{-1}}{s+\delta}$	$\dfrac{r_r^{-1}}{r_g^{-1} + r_r^{-1}}$	$\dfrac{n(k_P^2 + (\nu k_r)^2)}{2m(d + r_g^{-1} + \nu)}, \ \delta \ll 1$

iDroop: Decouples steady-state and dynamic performance, and improves dynamic performance

iDroop Stability

$$g_i(s) = (M_i s + D_i + R_{g,i})^{-1}$$

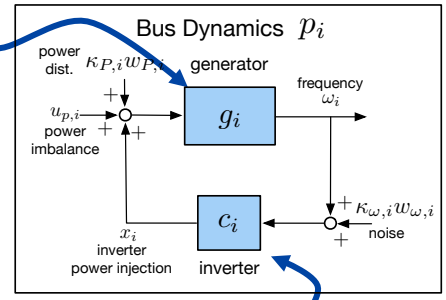

$$c_i(s) = -\frac{\nu_i s + \delta_i R_{r,i}^{-1}}{s + \delta_i}$$

Richard Pates
Lund University

Challenge:

How to guarantee (robust) stability in the presence of heterogeneous bus dynamics, unknown network, and measurement delays.

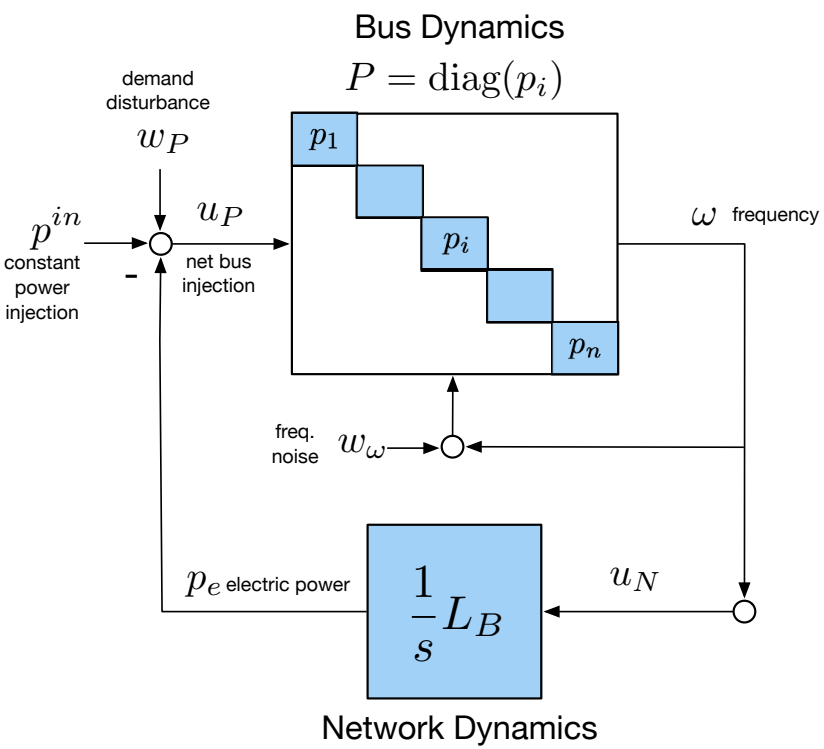

Standard approach: Passivity

If $p_i(s)$ is strictly positive real (SPR):

$$\delta_i > 0, \nu_i > 0, \text{ and } R_{r,i}^{-1} > 0$$

In fact, for **unknown network** (L_B), passivity is also **necessary.**

Beyond passivity: $p_i \in H_\infty$, and $[L_B]_{ii} \leq \frac{1}{\gamma_i}$

If there exists $h \in H_\infty$ such that $sh(s) \in PR$ and

$$h(s)\left(\frac{\gamma_i}{2} s + p_i(s)\right) \in SPR$$

Then, $[P, N]$ is stable

decentralized, can be used to analyze delays, more... IFAC WC

Summary

- Develop a novel modeling and analysis framework for inverter-based dynamic droop control design
- Study tradeoffs between steady-state and dynamic performance
- Design Dynamic Droop (iDroop) control that can decouple these metrics
- Provide decentralized stability guarantees using limited network information

Thanks!

Related Publications:

Jiang, R. Pates and E. Mallada, "Performance tradeoffs of dynamically controlled grid connected inverters in low inertia power systems," 56th IEEE Conference in Decision and Control (CDC), **submitted**

R. Pates and E. Mallada, "Decentralized robust inverter-based control in power systems," in IFAC World Congress, **to appear**

E. Mallada, "iDroop: A dynamic droop controller to decouple power grid's steady-state and dynamic performance," in 55th IEEE Conference on Decision and Control (CDC), Dec. 2016

Enrique Mallada

mallada@jhu.edu

http://mallada.ece.jhu.edu